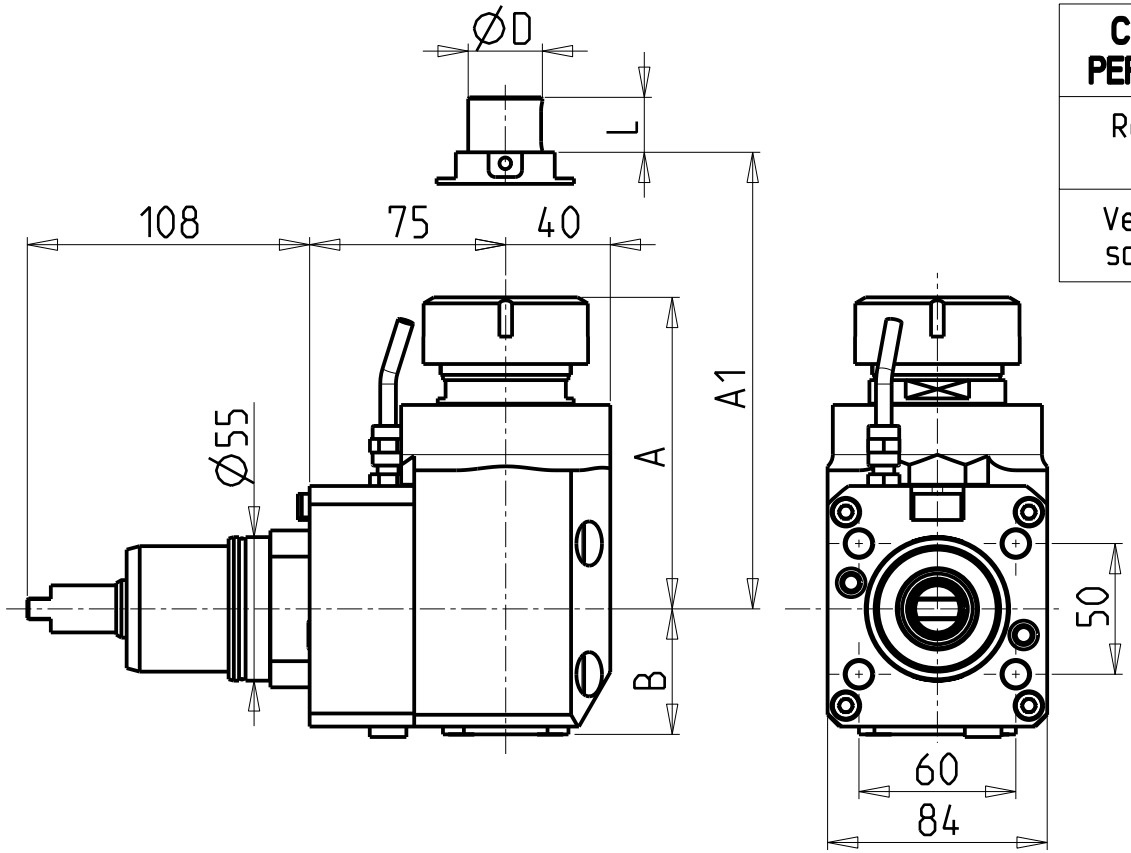

CUSCINETTI MAGGIORATI PER LAVORAZIONI PESANTI

Reinforced bearings for heavy machining

Vergroesserte lager fuer schwerere Bearbeitungen

ATTENZIONE - ATTENTION - ACHTUNG

- VERIFICARE LE MISURE DI INGOMBRO PER POSSIBILE INTERFERENZA SU ALCUNI MODELLI DI MACCHINE
- Please check the overall sizes for possible interferences on some machine models
- Bitte überprüfen sie das ausmass um mögliche interferenzen auf einigen maschinen modellen zu vermeiden

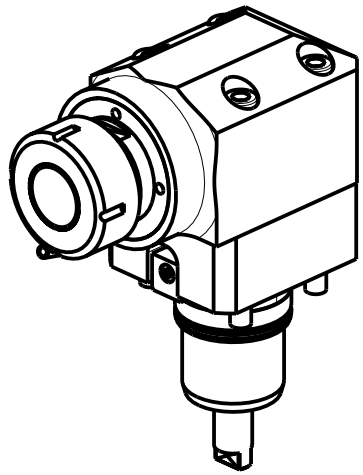

- Chiave inclusa
- Key included
- Schluessel inbegriffen

Cod. MT	Mandrino Spindle Spindel	I	RPM	Coppia Max Max Torque Max Drehmoment	Reversibile lato mandrino/contromandrino Reversible sub/main spindle side Umkehrbare Spindelseite/ Gegenspindelseite	Lubr.interna Coolant through Innenkuehlung	Lubrificazione est. Ext. coolant Aussenkuehlung	A	B	A1	ØD	L	CHIAVI NON INCLUSE Keys not included Schluessel nicht einbegriffen	
NKM0990140	ER40	1:1	6000	50Nm	X	-	X	119.16	48	-	-	-	CHUB46	CHSTER40
NKM0990240	ER40	1:1	6000	50Nm	X	P=70bar	X	119.16	58	-	-	-	CHUB46	CHSTER40
NKM0992519	Ø1"x19	1:1	6000	50Nm	X	-	X	-	48	91.5	1"	19	CHUB46	CH_VTCROCE_M12 *
NKM0992721	Ø27x21	1:1	6000	50Nm	X	-	X	-	48	91.5	27	20	CHUB36	CH_VTCROCE_M12 *

NAKAMURA-TOME

WT250 - WT150II/250II - WTW150 - WTS150 - SC150/200/250 - SC200II 12/16 ST. - SC300II 16ST. - JX200/250 - SUPER NTJX - NTY3 150/250

MODULO MOTORIZZATO ASSIALE MAGGIORATO H=75mm
Axial reinforced driven tool H=75mm
Axial angetriebenes Werkzeug vergroessert H=75mm

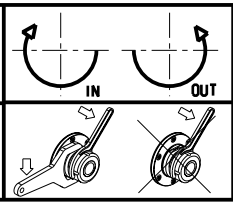

M.T. srl
Via Casino Albini 480
Tel. 0541/956034-957884
Fax 0541/956341
47842 S. GIOVANNI IN M. (RN)
e-mail: mtma@mtmarchetti.com
http://www.mtmarchetti.com

NKM170-2-20

Subject to change without notice.

09/2024