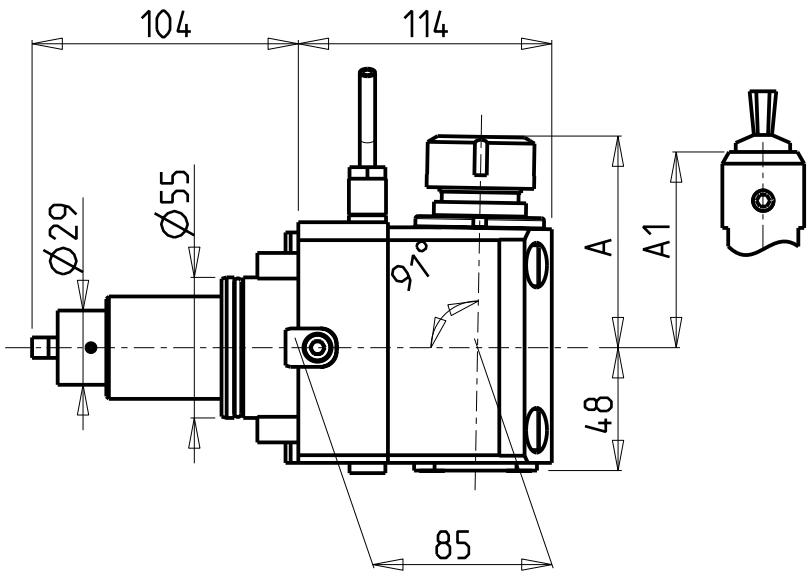

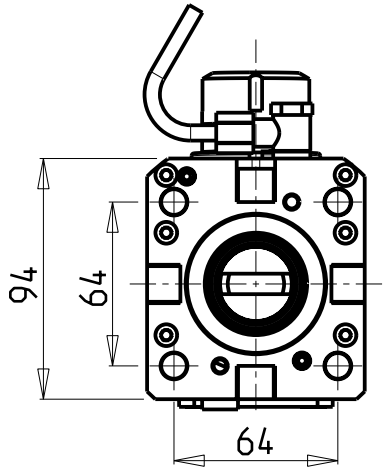

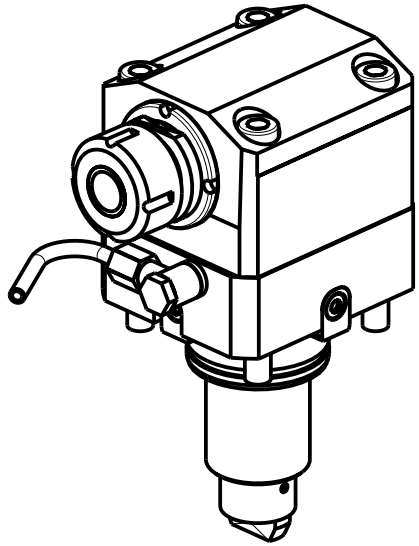

Cod. MT	Mandrino Spindle Spindel	I	RPM	Coppia Max Max Torque Max Drehmoment	Reversibile lato mandrino/contromandrino Reversible sub/main spindle side Umkehrbare Spindelseite/ Gegenspindelseite	Lubrificazione est. Ext. coolant Aussenkuehlung	A	A1	CHIAVI NON INCLUSE Keys not included Schluessel nicht einbegriffen	
DW00029125	ER25	1:1	6000	50Nm	X	X	82.35	-	CHSTER25	CHUB36 o 0100000
DW00029108	WELDON 8	1:1	6000	50Nm	X	X	-	76.5	-	-
DW00029110	WELDON 10	1:1	6000	50Nm	X	X	-	76.5	-	-
DW00029112	WELDON 12	1:1	6000	50Nm	X	X	-	76.5	-	-
DW00029116	WELDON 16	1:1	6000	50Nm	X	X	-	73.5	-	-

ROMI

MOD: GL 300Y/S

MODULO MOTORIZZATO ASSIALE PER POLIGONATURA INTERNA H=85mm
Axial driven tool for internal polygon-making H=85mm
Axial angetriebenes Werkzeug fuer interne Facettierung H=85mm

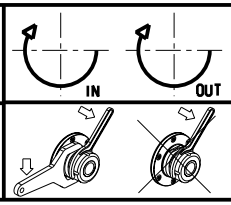

M.T. srl
Via Casino Albini 480
Tel. 0541/956034-957884
Fax 0541/956341
47842 S. GIOVANNI IN M. (RN)
e-mail: mtma@mtmarchetti.com
http://www.mtmarchetti.com

ROM230-2-30

Subject to change without notice.

09/2024